Eye-Sight

This series is designed for security professionals and offers superior image quality, advanced AI analytics, seamless connectivity, and unparalleled insight and protection, with options and configurations to meet specific needs. The Check Point Quantum IoT Nano and DDA2 Analytics provide detailed attribute analysis and advanced threat prevention.

PROVISION ISR
PROTECTING YOUR PRIVACY

I6-360IPEN-MVF-V5

6MP MVF Lens Bullet Camera with IR LED and DDA2 Analytics

Equipped with a 2.8-12mm motorized lens, this 6MP camera is designed for long-distance surveillance (up to 60m) in indoor and outdoor scenarios. Fitted with the new "Dual System" technology, the camera can deal with internal anomalies independently, making it more redundant to software-based issues. The camera offers broad possibilities for Analytics, from Face Detection to the outstanding DDA Analytics (Detect, Distinguish, Alert) and the newly developed DDA2, which can perform object recognition, object counting, and investigate specifics such as age, color, gender, vehicle brand and much more. The I6-360IPEN-MVF-V5 camera is here to end false alarms. Check Point Quantum IoT Nano agent is integrated into this model. It provides an advanced threat prevention layer against the common attack vectors at runtime.

EYE-SIGHT IP

CHECK POINT EMBEDDED

6 MP

60m IR — IR View 0 Lux
PoE
WDR — True
Audio IN
Audio OUT
Build-In Mic
IP67 — Protection rating
Alarm IN/OUT

DDA 2nd ANALYTICS
Infra Red
face detection
NDAA
MOTORIZED LENS
ONVIF M T S G

MAIN FEATURES

- I6-360IPEN-MVF-V5 6MP MVF Lens Bullet Camera with IR LED and DDA2 Analytics
- Sensor: 1/2.5" CMOS
- Resolution: 3296×1856 25/30FPS (6MP)
- Lens: 2.8-12mm MVF with Auto Focus (106°-35°)
- True Day&Night – ICR
- Illumination: 60m (4 High-Power IR LEDs)
- Compression: H.265+/ H.264+ / H.265 / H.264 / MJPEG
- Quantum IoT Nano agent by Check Point™
- General Analytics: Camera Tampering
- Human & Vehicle Recogition: SMD, Sterile Area, Line Crossing, Object Counting (Line), Object Counting (Area), Loitering Detection, Illegal Parking Detection
- AI (Face Detection): 10 Faces per frame
- AI: Heatmap
- DDA2: Advanced Object Classification
- True WDR (120dB), BLC, HLC, ROI
- SD Card: Event/Schedule Record (Up to 256GB)
- Alarm in + Alarm out
- Built-in Microphone + Audio input + Audio output
- ONVIF: Profile M/T/S/G
- Water Proof: IP67
- Weight: ~1050g
- Power: DC12V/~800mA / PoE/~12W

https://provision-isr.com

I6-360IPEN-MVF-V5

PROVISION ISR
PROTECTING YOUR PRIVACY

SPECIFICATIONS

3rd Party Cyber Protection	
General	Quantum IoT Nano agent by Check Point™
Protection Methods	Shell injection protection, File Monitor, Import-Table Protection, Dynamic-Memory Protection

NDAA Compliant	
NDAA Compliant	Yes

Video	
Image Sensor	1/2.5" CMOS
Effective Pixels	3296x1856
Electronic Shutter	1/4s ~ 1/100000s
Day & Night	ICR
Min. Illumination	0.008lux (@F1.6, AGC on) 0lux with IR on

Audio	
Audio compression	G.711A/G.711U
Communication	Two-Way Audio

Image	
Image Settings	AWB, AGC Adjustable, Exposure Mode (Auto) Sharpness, Saturation, Brightness & Contrast Adjustable
Image Enhancement	True WDR (120dB), BLC, HLC, ROI
Noise Reduction	3D-DNR
Image Orientation	Mirror/Flip, Corridor Mode
Privacy Zone	Yes

Events and Analytics	
Analytics	General Analytics: Camera Tampering Human & Vehicle Recogition: SMD, Sterile Area, Line Crossing, Object Counting (Line), Object Counting (Area), Loitering Detection, Illegal Parking Detection AI (Face Detection): 10 Faces per frame AI: Heatmap DDA2: Advanced Object Classification
Motion Detection	Yes
Metadata	Human: Gender, Age, Direction, Hat, Glasses, Backpack, Upper clothing type, Upper clothing color, Lower clothing type, Lower clothing color, Skirt/Dress, Mask, Shoulderbag Car/Truck: Color, Type, Brand, Model 2-Wheel: Type

I6-360IPEN-MVF-V5

Compression	
Resolution	6MP (3296x1856) / QHD (3200x1800) / 2880x1624 / 2688x1520 / 2MP (1920x1080) / 1MP (1280x720) / D1 (704x576) / CIF (352x288)
Frame Rate	1-25/30FPS
Video Compression	H.265+/ H.264+ / H.265 / H.264 / MJPEG**
Multi-Stream	Master Stream: 6MP(3296x1856) / QHD (3200x1800) / 2880x1624 / 2688x1520 / 2MP (1920x1080) Substream: 1MP/QVGA/D1/CIF Third Stream: QVGA/D1/CIF (1~30fps)
Bit Rate	64Kbps ~ 8Mbps@H.265 / 128Kbps ~ 10Mbps@H.264
Encode Mode	VBR/CBR
Image Quality	Five levels under VBR; Free adjustment under CBR

Lens	
Lens (Field of View)	2.8-12mm MVF with Auto Focus (106°-35°)
Iris	DC Iris
Lens Mount	Ø14 Mount
Detect	2.8~12mm(W): 66m(218ft) - 2.8~12mm(T): 204m(669ft)
Recognize	2.8~12mm(W): 13m(44ft) - 2.8~12mm(T): 41m(135ft)
Identify	2.8~12mm(W): 7m(23ft) - 2.8~12mm(T): 20m(66ft)

Network	
User Access	Supports simultaneous monitoring of up to 10 users with multi-stream real-time transmission
Network Protocol	IPv4, IPv6, TCP, UDP, DHCP, NTP, DDNS, 802.1X, RTSP, RTMP Multicast, UPnP, Email, FTP, FTPS, HTTPS, QoS, HTTP POST, Auto Report, P2P
Remote Monitoring	IE Browsing (Plug-In required), Chrome/Edge/Safari/Firefox plug-in free browsing, Ossia VMS Software, Provision Cam2 Mobile App *P2P WEB connetion always requires Plugin
Ethernet	100Mbps
ONVIF	Profile M/T/S/G

Connectivity	
Network	RJ45 (+PoE)

I6-360IPEN-MVF-V5

Audio Connectivity	Built-in Microphone + Audio input + Audio output
Alarm	Alarm in + Alarm out
SD Card	Event/Schedule based Main/Substream recording (Up to 256GB)
Wiegand	N/A
Power	DC Socket
Analog Video Output	CVBS out + Technician Port

Housing	
PoE	Yes
Illumination	60m (4 High-Power IR LEDs)
Power Supply	DC12V/~800mA / PoE/~12W
Protection Rate	Water Proof: IP67
Work Environment	-30°C~60°C, 10%~90% Humidity
Bracket	3-Axis Bracket
Dimensions	220.8x79.4x81.2mm
Weight (gross)	~1050g
Hard Reset Button	Yes

I6-360IPEN-MVF-V5

DIMENSIONS

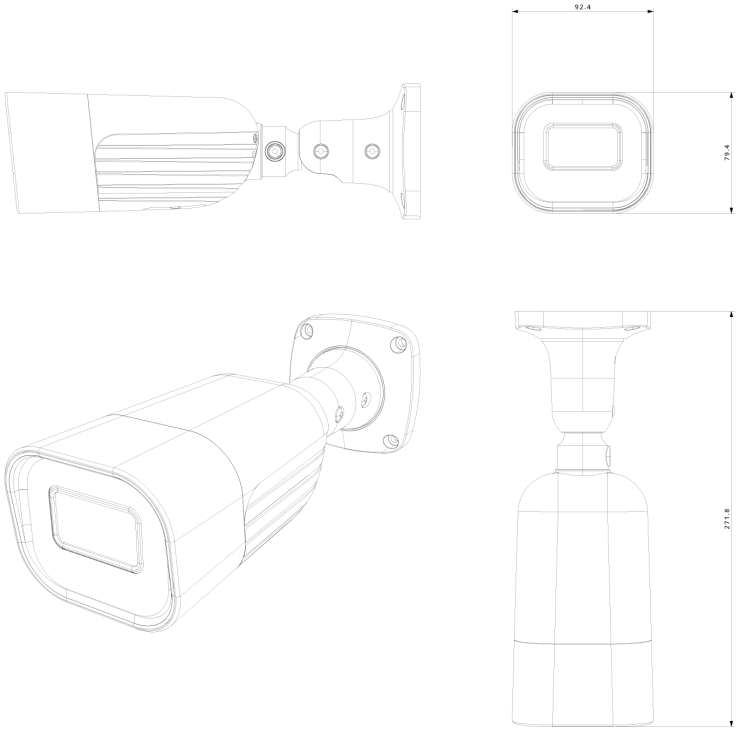

ACCESSORIES

I6 / BLH

IP66 | IP64

PR-JB14IP66

or

PR-JB14IP64

Wall		Ceiling		Pole			Corner		
	optional		optional		optional	optional		optional	optional
PR-WB14	PR-B10EX PR-B20EX PR-B50EX	PR-CB14	PR-B10EX PR-B20EX PR-B50EX	PR-B50EPB	PR-WB14	PR-CB14	PR-B50ECB	PR-WB14	PR-CB14